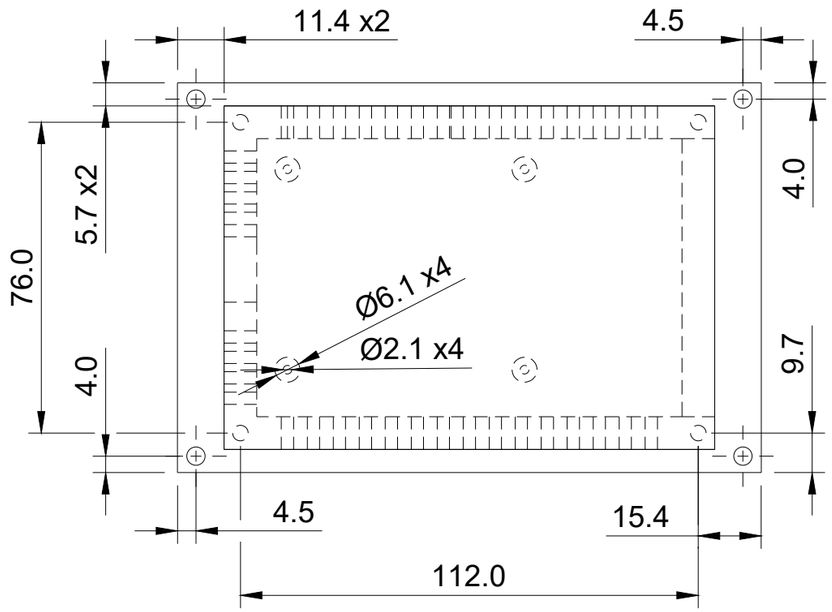

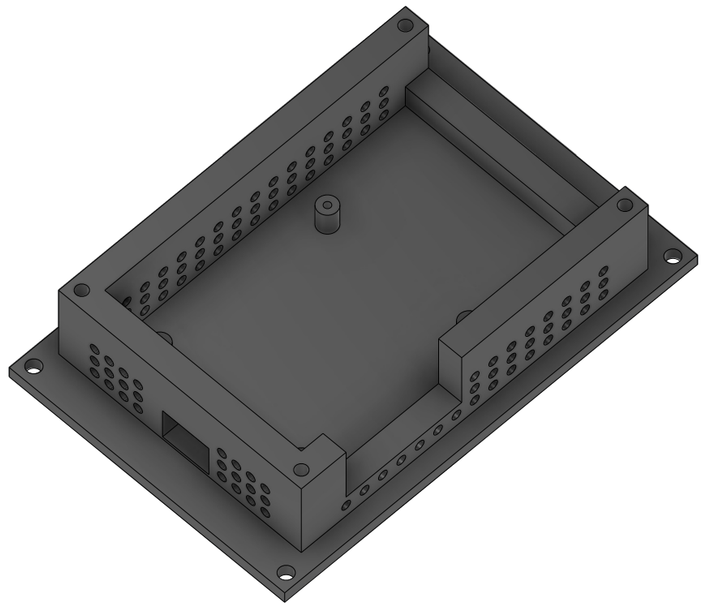

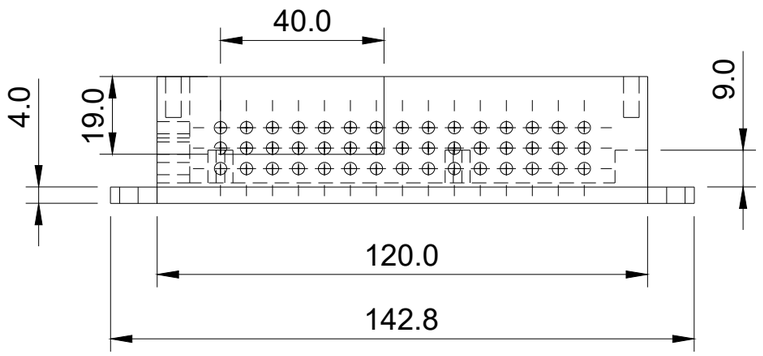

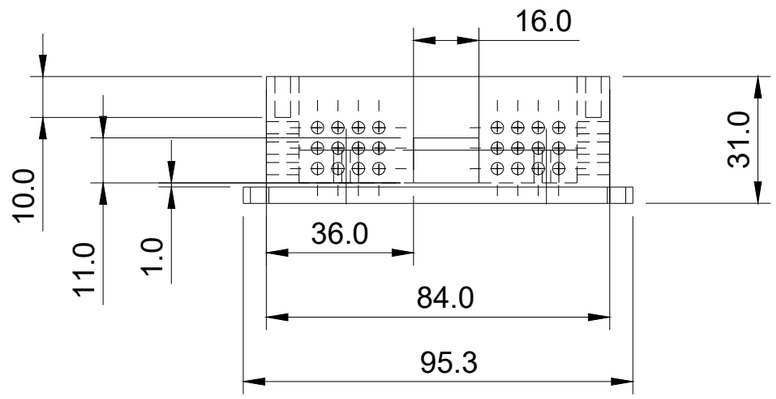

Dept.	Technical reference	Created by Ryan Miguel Gonzales 4/12/26	Approved by
		Document type	Document status
		Title RPi Board Case	DWG No.
			Rev. / Date of issue / Sheet 1/2

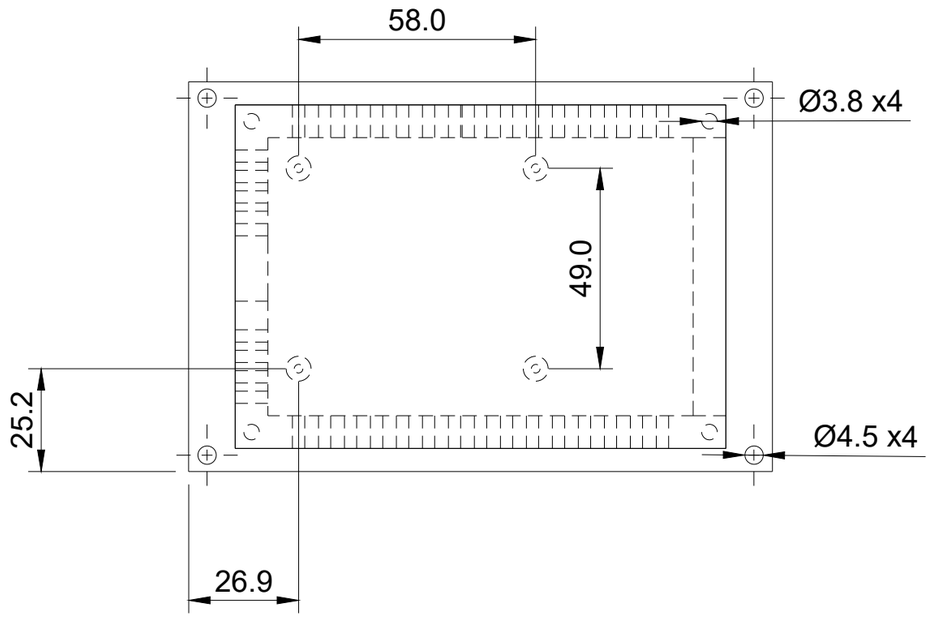

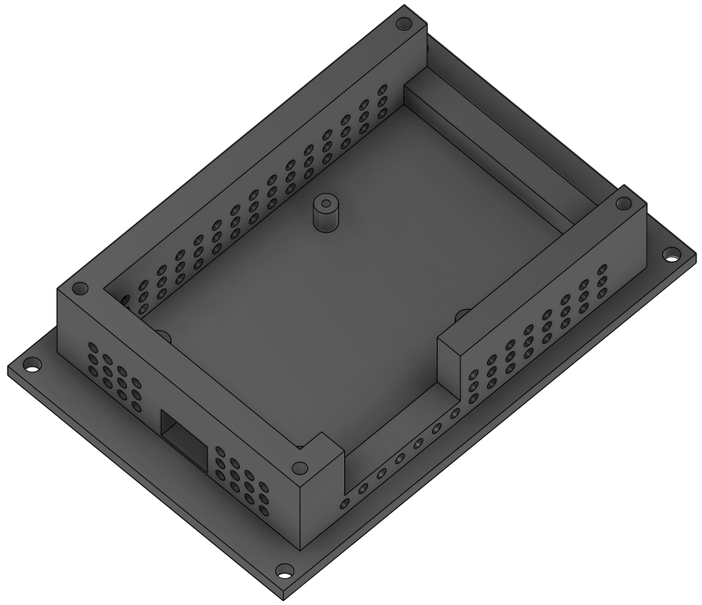

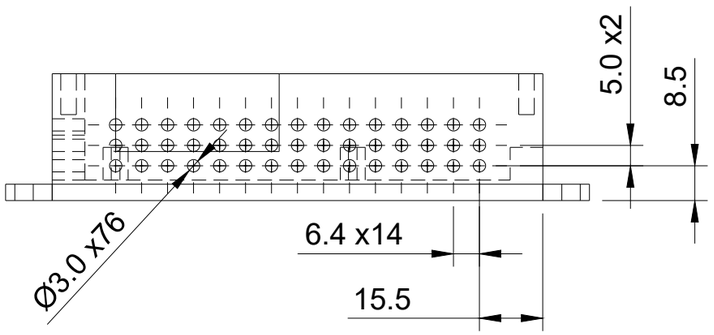

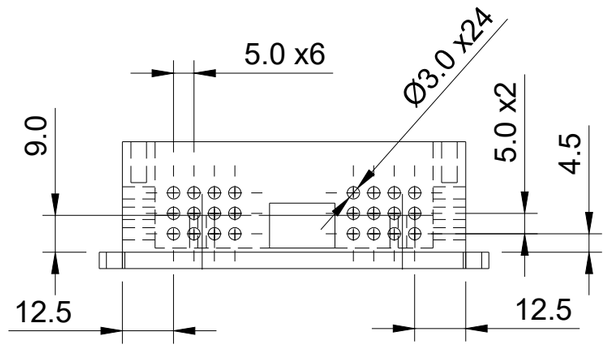

Dept.	Technical reference	Created by Ryan Miguel Gonzales 4/12/26	Approved by
		Document type	Document status
		Title RPi Board Case	DWG No.
			Rev. / Date of issue / Sheet 2/2